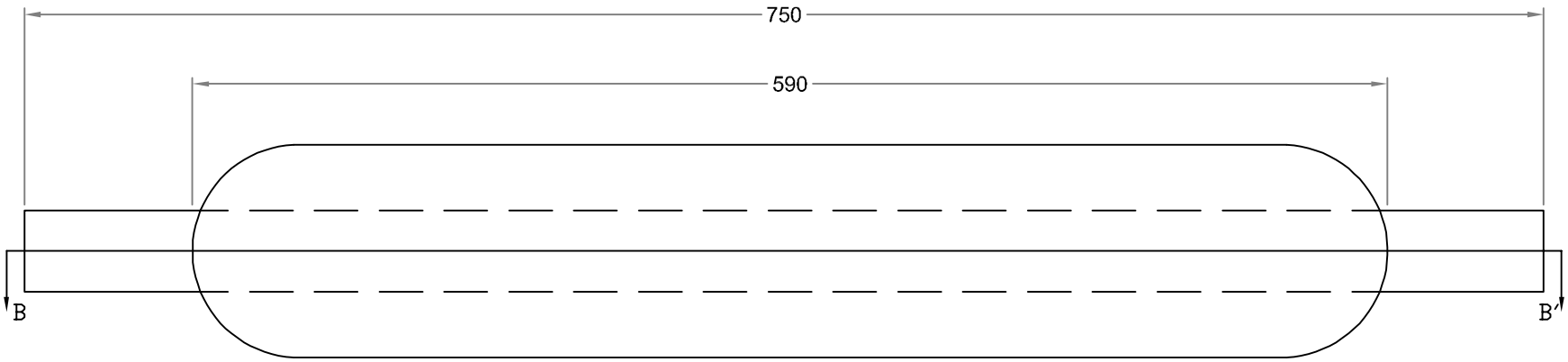

CROSS SECTION
B–B′

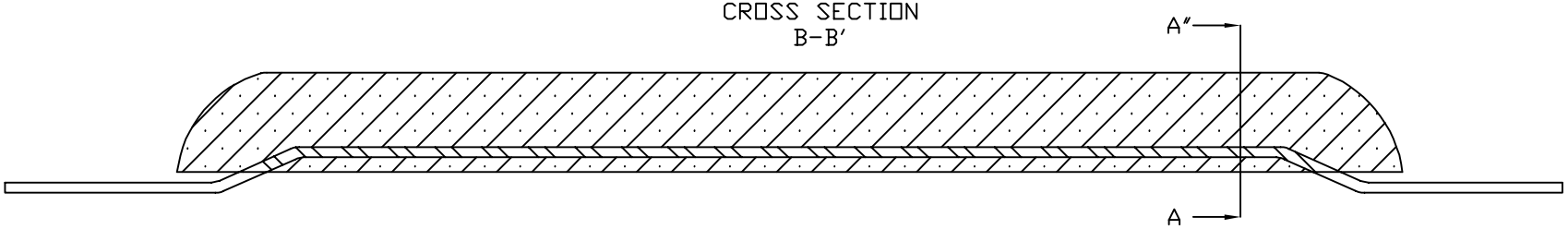

CROSS SECTION
A–A″
SCALE FACTOR: 2

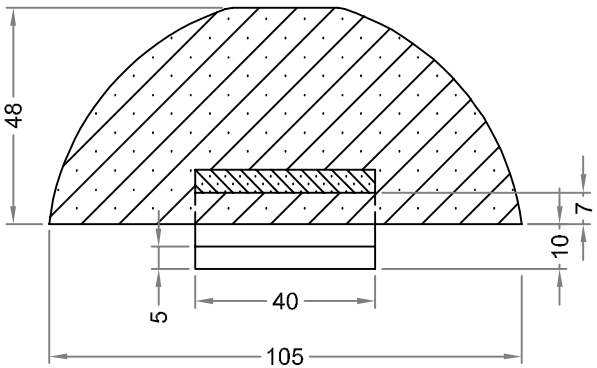

NOTES:

1.Net Weight: 14.3 Kg
2.Gross weight: 16.0 Kg
3.Insert Weight: 1.7 Kg

4.Insert quality:
Plate,bar sections:EN10025
grade S235 or S275

5.Insert Welding
All fabrication of steel
insert are accoring EN10287
and EN10288

6. All dimensions are in mm

No	DATE	REVISION	REV	CHK	APP

DRAWING NAME:

ANODE GENERAL DESCRIPTION

ANODE TYPE:

160Z

DESIGNED	S.P.	BELONGS	
STUDIED	S.P.	PAGE	1
APPROVED	A.Y.	SCALE	1/3
DRAWING NUMBER		DATE	13/10/2003
160Z-590-105-40		CODE	520030